02-5 Pocket & Flipper Door Slides

Pull-Out Pantry Slides - 5626 Series

* Loading capacity: 59 kgs (130 lbs) class
* With mounting brackets at both sides for top and bottom mount
* With hold-in detent
* Steel ball bearing full extension, 22mm over travel
* Finish: zinc or black zinc electro-plated
* For slide-out pantry units, TV shelves, store fixtures and institutional furniture applications

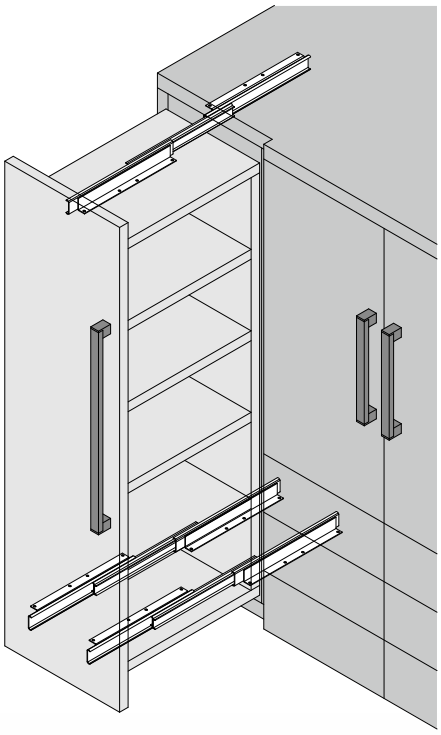

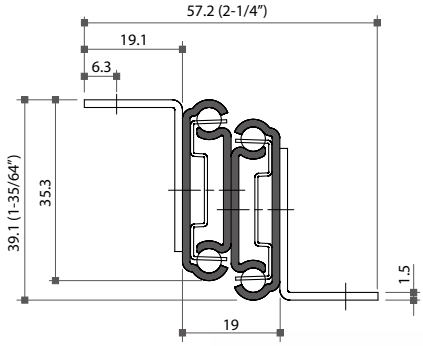

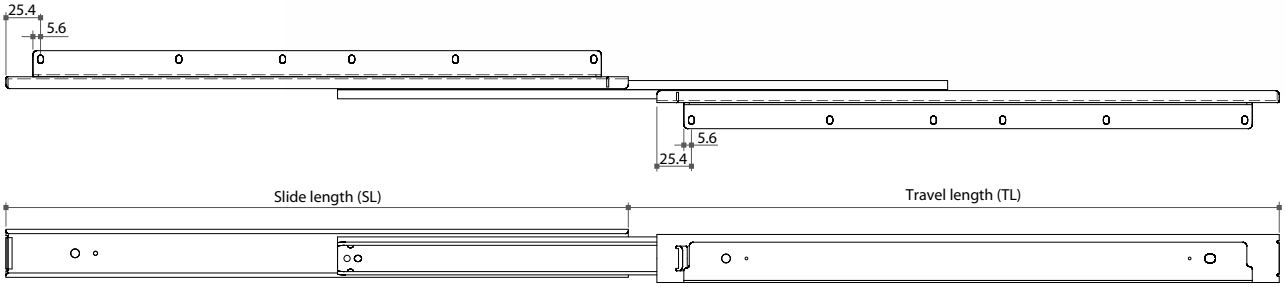

Item No.	Slide length (SL)	Travel length (TL)
5626-12	304.8mm	325.9mm
5626-14	355.6mm	376.7mm
5626-16	406.4mm	427.5mm
5626-18	457.2mm	478.3mm
5626-20	508.0mm	529.1mm
5626-22	558.8mm	579.9mm
5626-24	609.6mm	630.7mm
5626-26	660.4mm	681.5mm
5626-28	711.2mm	732.3mm